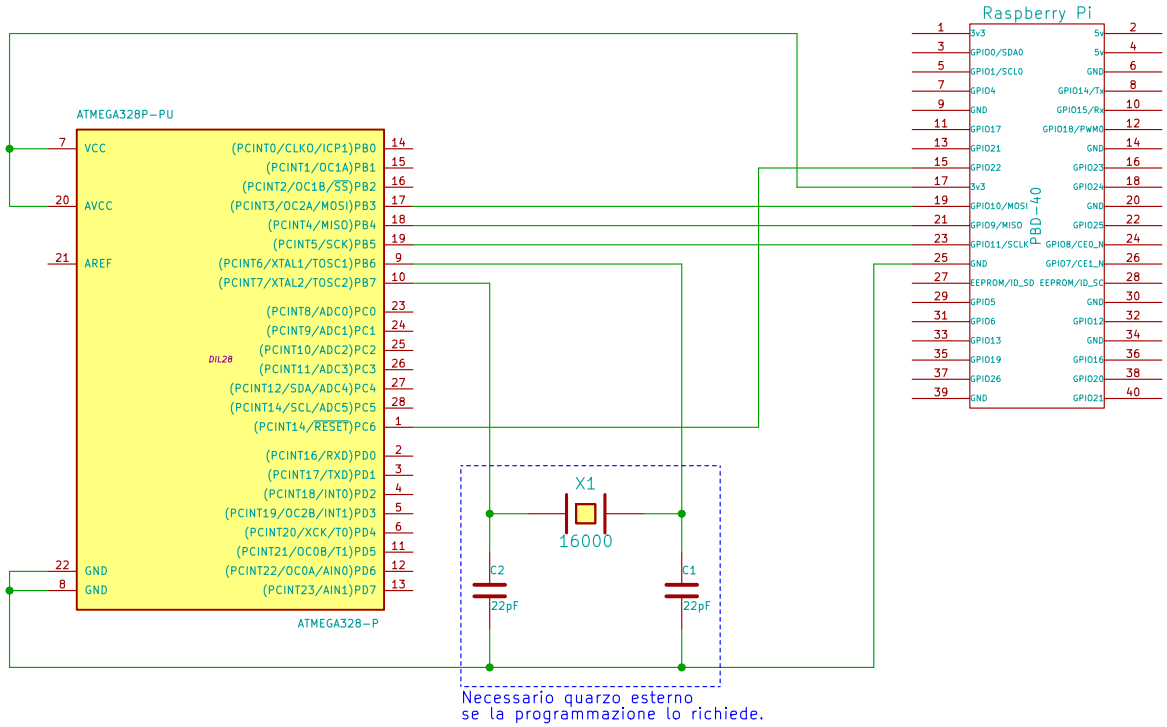

mail4davide@gmail.com		
File: raspberrypi-atmega328.sch Sheet: /		
Title: Raspberry Pi program ATmega328		
Size: A4	Date: 12 dec 2015	Rev: 0.0.1
KiCad E.D.A.		Id: 1/1